J. Plasma Fusion Res. SERIES, Vol. 5 (2002) 514–518

Low-*n* Ideal MHD Analysis in Limiter Plasma on LHD

NARUSHIMA Yoshiro, SAKAKIBARA Satoru, WATANABE Kiyomasa,
NISHIMURA Kiyohiko, YAMADA Hiroshi, NAKAJIMA Noriyoshi, YAMAZAKI Kozo,
COOPER W. Anthony[1] and LHD Experimental Group
National Institute for Fusion Science, Toki 509-5292, Japan
[1] *Centre de Researchers en Physique des Plasma (CRPP), Association Euratom-Confederation Suisse, Ecole Polytechnique Federale de Lausanne, CH-1015 Lausanne, Switzerland*

(Received: 11 December 2001 / Accepted: 2 October 2002)

Abstract

Serious MHD instabilities leading to the degradation of the energy confinement time and the termination of the discharge have not been observed in experiments on the Large Helical Device (LHD) [S. Sakakibara *et al.*, Nucl. Fusion **41**, 1177 (2001)]. The stability of low-*n* modes is calculated with the three-dimensional MHD stability analysis code of **TERPSICHORE** [W.A. Cooper, Plasma Phys. and Control. Fusion **34**, 1011 (1992)]. The results show that the high beta plasma becomes MHD unstable with an external mode (n/m = 1/1). In case the rotational transform at the edge decreases below $\iota_{edge}/2\pi$ = 1.0, the external mode is also destabilized. By using the limiter, $\iota_{edge}/2\pi$ can be controlled and it is possible to imitate the high beta plasma from the viewpoint of the iota profile. The characteristics of the MHD instabilities in the high beta plasma need to be examined both theoretically and experimentally. We propose, therefore, a reasonable limiter experiment to check the characteristics of the MHD instabilities with external modes.

Keywords:

Large Helical Device, TERPSICHORE, ideal MHD, low-*n* mode, external mode, Mercier criterion, limiter plasma

1. Introduction

Ideal MHD analysis for a heliotron shows the stability in the core region by the magnetic well produced by the Shafranov shift. On the other hand, it shows the instability in the peripheral region that remains with a magnetic hill, which shows the characteristics of a linear stellarator [1]. From the calculation of **TERPSICHORE** [2], it is also shown that the peripheral region of the LHD plasma is destabilized at the high beta region (Fig. 1(b)). The results of the analysis show that as the beta goes up with a fixed pressure profile, the peripheral region of the plasma becomes unstable to both Mercier and low-*n* (n/m = 1/1) modes. Here, n and m are the toroidal and poloidal mode numbers, respectively. However, at present, serious MHD instabilities leading to the degradation of the energy confinement time and the termination of the discharge have not been observed in experiments on the Large Helical Device (LHD) [3,4]. By using the limiter in LHD, the plasma surface boundary is controlled and the rotational transform at the edge can be changed. Because the limiter plasma is equivalent to a high beta plasma from the viewpoint of the profile of the rotational transform, the high beta plasma is not required to investigate the characteristics of the external mode. We propose to apply the results of the analysis to the limiter experiment.

Corresponding author's e-mail: narusima@LHD.nifs.ac.jp

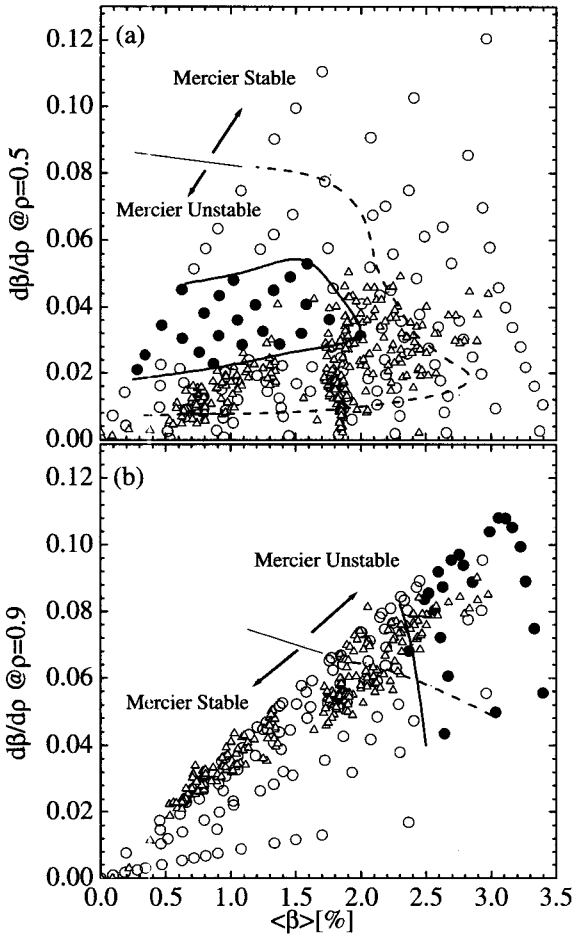

Fig. 1 Relation between the volume averaged beta and the pressure gradient at (a) $\rho = 0.5$ and (b) $\rho = 0.9$.

In this paper, we will show the typical region of Mercier and low-*n* instability in the following section. The conditions of the appearance of the external mode are examined in Sec. **3**. We will propose the experiment and summarize in Sec. **4**.

2. MHD Stability Region in LHD

The results calculated using **TERPSICHORE** are shown in Fig. 1. The open and closed circles show the stable and unstable points with respect to the interchange mode, respectively. The experimental data are shown with triangles. The solid line as a reference shows the low-*n* unstable region, which encloses the low-*n* unstable points calculated by **TERPSICHORE**. The dashed line shows the Mercier criterion of $D_I = 0$ [5].

2.1 Stability in the Core Region

The stability in the core region is shown in Fig. 1(a). The gradient $d\beta/d\rho$ is the value at a certain fixed position of $\rho = 0.5$, because it is easy to compare the calculated result with the experimental result. Here, ρ is the normalized average minor radius. From these calculated data, it is found that the low-*n* unstable region exists inside of the Mercier unstable region, and that lies around $\beta < 1.9$ % and $0.02 < d\beta/d\rho < 0.05$. The domain of $\beta > 2.2$ % and $d\beta/d\rho > 0.03$ shows both Mercier and low-*n* stability. The experimental data lies in the Mercier unstable region, and it grazes the low-*n* unstable region around $\beta = 1$~2 %. As the beta goes up, the pressure gradient of the experimental data increases till $d\beta/d\rho = 0.04$~0.05. These results suggest that as the beta goes up with a fixed pressure profile shape, the plasma would be in the stable region to both Mercier and low-*n* modes around the core region of the plasma.

2.2 Stability in the Peripheral Region

In the peripheral region ($\rho = 0.9$), Fig. 1(b) shows the Mercier unstable region around $\beta > 2.0$ % and $d\beta/d\rho > 0.06$. The low-*n* unstable domain lies in the region around $\beta > 2.0$ %. The calculated data around $\beta > 2.5$ % are unstable with respect to low-*n* modes. There are calculated points which show instability at $\beta = 2.6$ % and $d\beta/d\rho = 0.04$. These destabilized points show the external mode. In these unstable points, the result of **TERPSICHORE** shows that the plasmas which do not have the rational surface of $\iota/2\pi = 1.0$ are stabilized under the fixed boundary. In the peripheral region, as compared with the case of the core region, there are many points of experimental data within the Mercier stable domain. The pressure gradient in the experimental data linearly increases with beta. As beta goes up, the resonant surface $\iota/2\pi = 1.0$ moves outward and finally disappears. In this situation, the **TERPSICHORE** code predicts the existence of an external mode. The peripheral region is stable to low-*n* modes at low beta and weak pressure gradient. The low-*n* destabilization appears in the high beta region. It is thought that if the beta increases, with the pressure profile shape held fixed, the LHD plasma will be in the unstable region for both Mercier and low-*n* modes in the peripheral region, which is a behavior different from the core ($\rho = 0.5$) region.

3. The Condition of the Appearance of External Modes

To investigate the external mode, we have analyzed one pressure profile in detail. The pressure profile is adopted to remove the effect of the current driven

instabilities and is expressed as $p = p_0(1-\rho^2)^{0.5}(1-\rho^8)$. Here, p and p_0 are the plasma pressure and the plasma pressure at the magnetic axis, respectively. As the gradient at $\rho = 1.0$ is zero, the surface current is absent. The equilibrium is solved with the **VMEC** code [6] under free boundary and net current-free conditions.

3.1 The High Beta Plasma Case

Figure 2 shows the change of the eigenvalue of $n/m = 1/1$ mode and the rotational transform at the plasma edge $\iota_{edge}/2\pi$. Since **TERPSICHORE** has adopted incompressibility, the calculation of the physically correct growth rate is abandoned. However, the marginal stability points are meaningful. In the region of $\beta < 2.6$ %, the eigenvalue does not appear or is less than 10^{-4}. As the beta exceeds $\beta = 2.6$ %, the eigenvalue increases steeply with beta. Simultaneously, the rotational transform at the edge decreases below $\iota_{edge}/2\pi = 1.0$. Some structures of the plasma with $\beta = 2.7$ % are shown in Fig. 3. The Mercier criterion indicates $D_I < 0$ (stable) at $\rho = 1.0$ (Fig. 3(a)). $dW > 0$ indicates stability (Fig. 3(b)). The rotational transform is less than 1.0 (Fig. 3(c)). The radial component of the displacement vector spectrum demonstrates the structure to be an external mode with a dominant $n/m = 1/1$ contribution (Fig. 3(d)). These results show a possibility of the mode becoming unstable under the condition of $\iota_{edge}/2\pi < 1.0$, even when the other parameters show the tendency toward stability ($D_I < 0$, $dW > 0$).

3.2 The Limiter Plasma Case

In the actual experiment, it is not so easy to obtain a high beta plasma because the heating devices (ECH, ICH and NBI) are required to be in optimal condition to achieve a high beta plasma. Therefore, we focus on the profile of the rotational transform. It is thought that when the rotational transform at the edge decreases below $\iota_{edge}/2\pi = 1.0$, the external mode with $n/m = 1/1$ occurs even in low beta plasmas. Before the experiment, we simulate the limiter plasma which has various $\iota_{(1)}/2\pi$ by **VMEC** and the plasma is analyzed using **TERPSICHORE**. The equilibrium analyzed here has the same pressure profile of $p = p_0(1-\rho^2)^{0.5}(1-\rho^8)$ and beta is $\beta = 1.4$ %. As shown in Fig. 2, this equilibrium with $\beta = 1.4$ % is stable to the $n/m = 1/1$ mode without the limiter. Figure 4 shows the change of the pressure and rotational transform profiles with the limiter. The limiter directly affects the position of the plasma boundary as a real coordinate. As a result, the profile of the rotational transform in flux coordinates is changed.

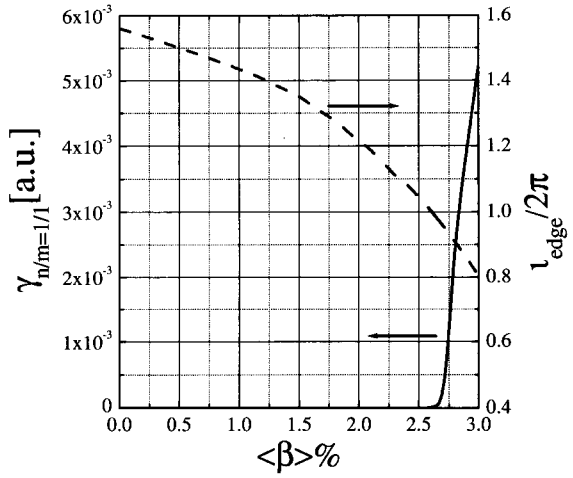

Fig. 2 Eigenvalue of $n/m = 1/1$ mode increases beyond $\beta > 2.7$ %. Simultaneously, the rotational transform at plasma edge decreases below 1.0.

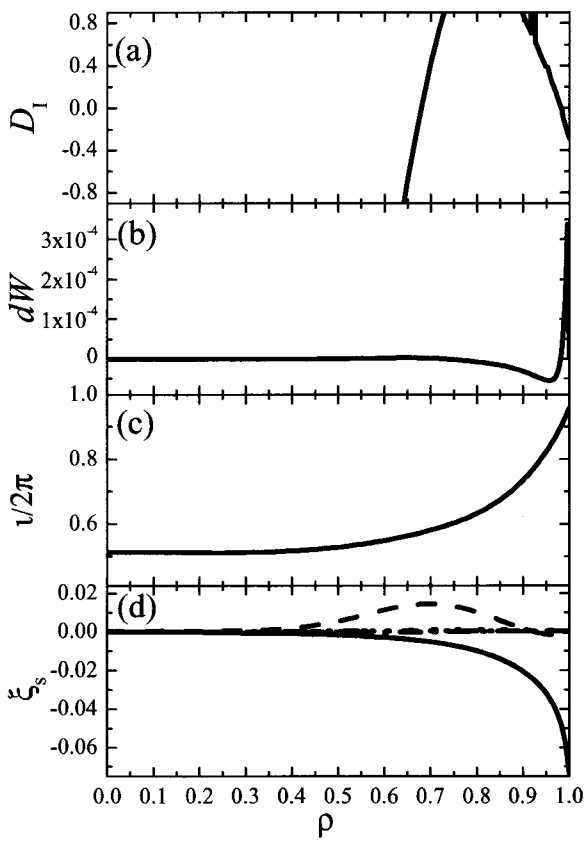

Fig. 3 The structures of the plasma with an external mode (a) $D_I < 0$, (b) $dW > 0$ and (c) $\iota_{edge}/2\pi < 1.0$ at $\rho = 1.0$. (d) The solid and dashed lines are the displacement vector spectra of the $n/m = 1/1$ and 1/2 modes, respectively. The mode structures show the external mode without the resonance surface of $\iota/2\pi = 1.0$ inside the plasma domain.

The pressure profile is influenced by the position of the limiter [7].

The rotational transform at the edge decreases with the insertion of the limiter. Figure 5 shows the relation between $\iota_{edge}/2\pi$ and the eigenvalue. The n/m = 1/1 mode is not destabilized for $\iota_{edge}/2\pi > 1.0$ and the plasma in this region contains the resonant surface of $\iota/2\pi = 1.0$. On the other hand, a finite growth rate appears suddenly for $\iota_{edge}/2\pi < 1.0$. The equilibrium with $\iota_{edge}/2\pi < 1.0$ is similar to the high beta plasma from the viewpoint of the profiles of the rotational transform.

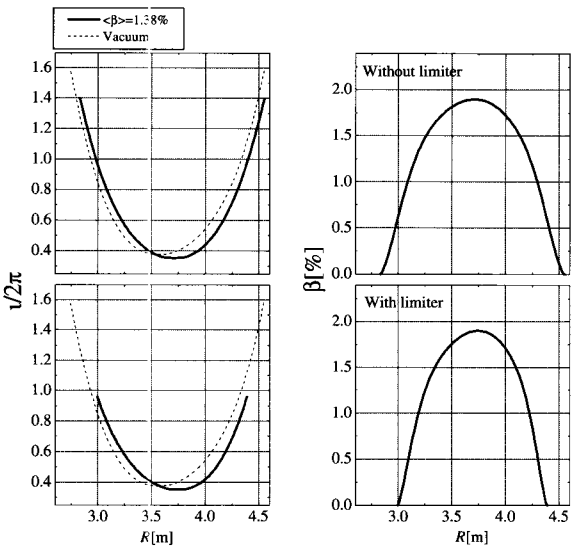

Fig. 4 Pressure and rotational transform profiles (upper) without limiter, (lower) with limiter cases.

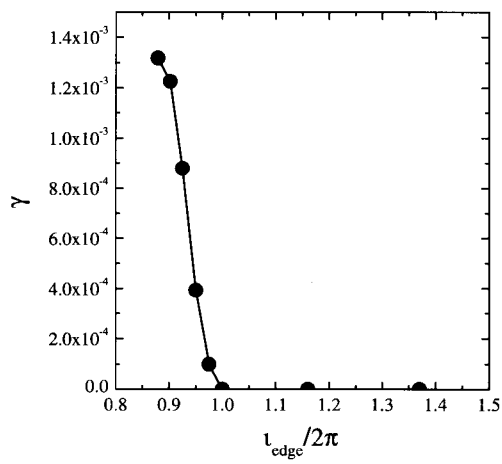

Fig. 5 The eigenvalue of an n/m = 1/1 mode increases with the decrease of $\iota_{edge}/2\pi$.

There is a possibility that pressure driven MHD instabilities occur in the case of the limiter plasma with $\iota_{edge}/2\pi < 1.0$ even in the stable plasma without the limiter.

4. Summary

It is shown that the MHD characteristic of LHD plasma is stable in the core region and it is unstable in the peripheral region. As a result of the calculation of **TERPSICHORE** about high beta plasma, it is shown that the external mode (n/m = 1/1) appears under the condition of the free boundary and $\iota/2\pi < 1.0$. In a limiter plasma which does not have the $\iota/2\pi = 1.0$, the external mode is destabilized even in the low-beta plasma. To check the existence of the external mode, the movable limiter is a useful tool (Fig. 6). By using the limiter in LHD, the plasma surface boundary is controlled and the rotational transform at the edge can be changed. Because the limiter plasma is equivalent to a high beta plasma from the viewpoint of the profile of the rotational transform, a high beta plasma is not fully

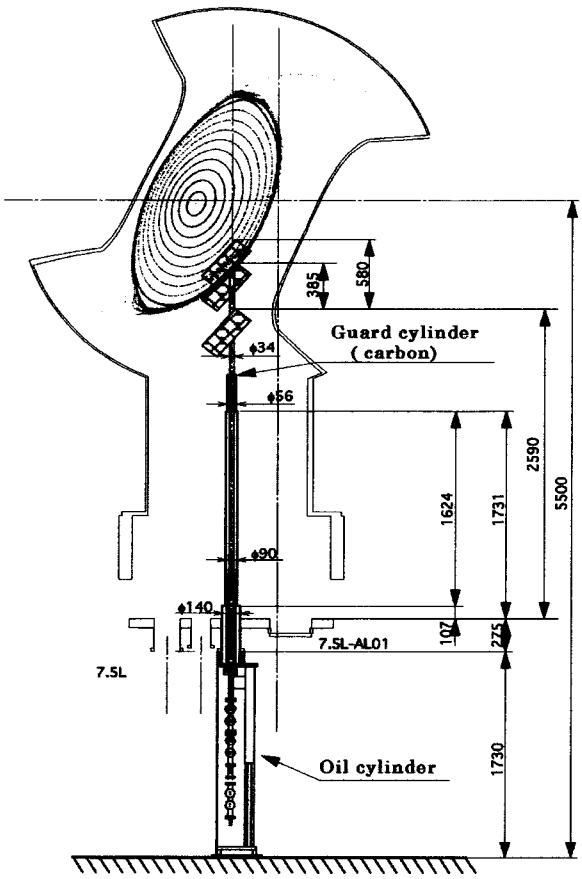

Fig. 6 Schematic of the LHD limiter system.

required. We have plans to produce limiter plasmas with moderate beta of β = 1~1.5 % and in which the resonance surface of $\iota_{edge}/2\pi$ = 1.0 is absent from the plasma. The MHD phenomena will be investigated theoretically and experimentally.

References

[1] Y. Nakamura, K. Ichiguchi, M. Wakatani and J.L. Johnson, J. Phys. Soc. Jpn. **58**, 3157 (1989).

[2] W.A. Cooper, Plasma Phys. Control. Fusion **34**, 1011 (1992).

[3] S. Sakakibara, H. Yamada, K.Y. Watanabe, Y. Narushima *et al.*, Nucl. Fusion **41**, 1177 (2001).

[4] H. Yamada, A. Komori, N Ohyabu, O. Kaneko, K. Kawahata *et al.*, Plasma Phys. Control. Fusion **43**, A55–A71 (2001).

[5] J.L. Johnson and J.M. Greene, Plasma Phys. **9**, 611 (1967).

[6] S.P. Hirshman, W.I. Van Rij and P. Merkel, Comput. Rhys. Commun. **43**, 143 (1986).

[7] K. Nishimura, K. Ida, K. Kawahata, K. Kozo *et al.*, J. Plasma Fusion Res. SERIES **4**, 106 (2001).